RoHS

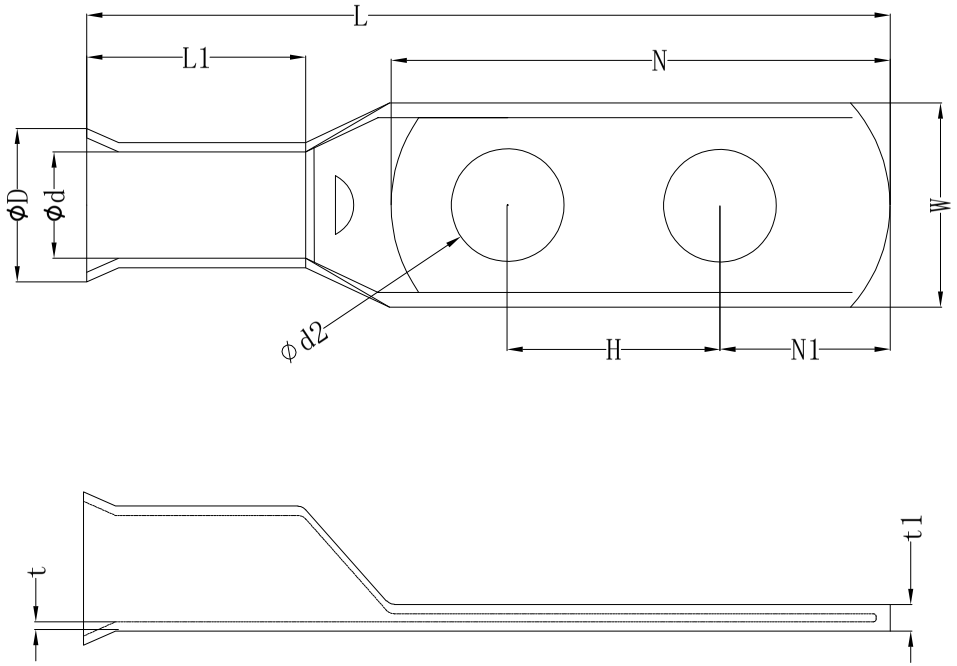

					OPERATION		DRAW	YANG	2016.06.06	SCALE	—	SCONDAR	
					X.X	±0.30	DESIGN			UNIT	mm		SCONDAR ELECTRONIC LIMITED
					X.XX	±0.20				SIZE	A4		
A0	2016.06.06	NEW	———	———	X.XXX	±0.10	CHECK	Lisa	2016.06.06	SHEET	1/1	PART NO.	紫铜管双孔端子
REV	DATE	MODIFICATION DESCRIPTION	CHANGE	APPROVE	Angle	±3°	APPROVE			PROJ.		TITLE:	
					DIM	TOL							