RoHS

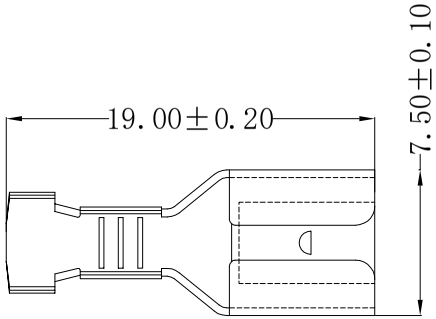

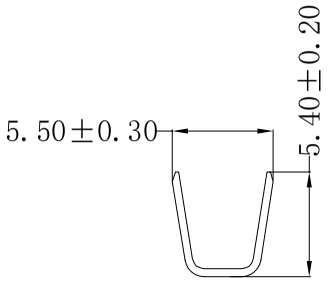

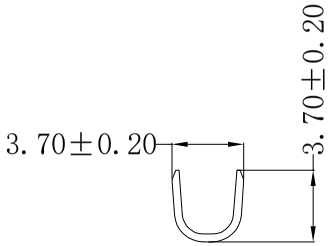

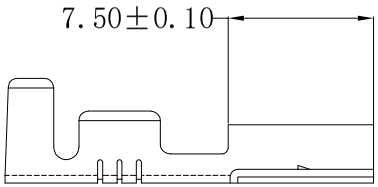

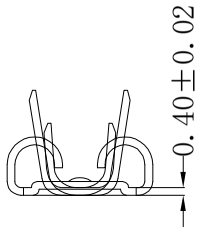

Technical requirements:

- -Material:Brass（黄铜）
- -Applicable wire:14～18Awg
- -Connection Table:6.3*0.8
- -Surface treatment: Tin plating
- -Appearance: the body should not be scratched or oxidized
- -Meet rosh and customer environmental requirements

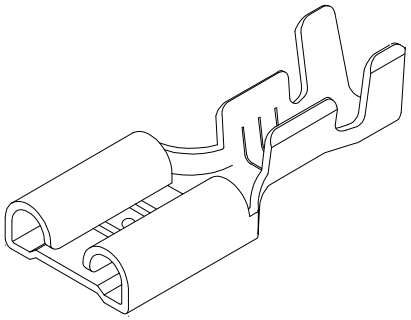

REV	DATE	MODIFICATION DESCRIPTION	CHANGE	APPROVE
A0	2016.06.06	NEW	———	———

OPERATION				
X.X	±0.30	DRAW	YANG	2016.06.06
X.XX	±0.20	DESIGN		
X.XXX	±0.10	CHECK	Lisa	2016.06.06
Angle	±3°	APPROVE		
DIM	TOL			

SCALE	——
UNIT	mm
SIZE	A4
SHEET	1/1
PROJ.	

SCONDAR

SCONDAR ELECTRONIC LIMITED

PART NO.	SCTST250085240C141
TITLE:	6.3x0.80 250# T=0.40 Crimp Female Terminal Brass Tin(Sn) Plating 14-18AWG Reel MPQ=5KPcs