RoHS

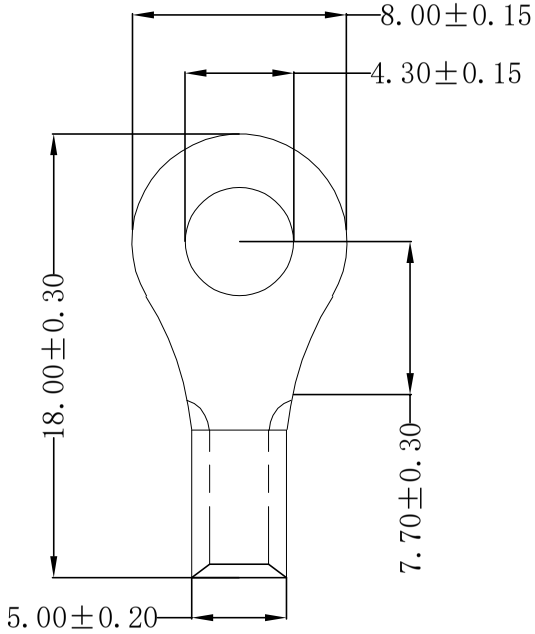

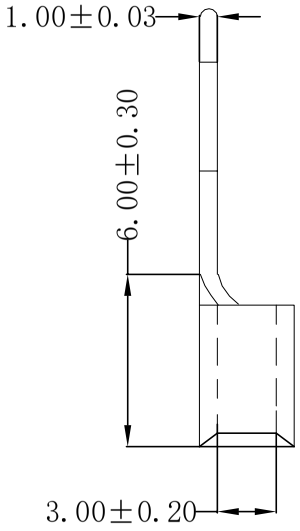

Technical requirements:

-Material:Copper (紫铜)
-Applicable wire:2.50～4.00mm²
-Surface treatment: Tin plating
-Plating thickenss: 2.5um～5um
-Coating temperature: 120° /2H
-Max Current: 37A
-USA Screw:#8
-Appearance: the body should not be scratched or oxidized
-Meet rosh and customer environmental requirements

REV	DATE	MODIFICATION DESCRIPTION	CHANGE	APPROVE
A0	2016.06.06	NEW	———	———

OPERATION					
X.X	±0.35	DRAW	YANG	2016.06.06	SCALE —
X.XX	±0.25	DESIGN			UNIT mm
X.XXX	±0.15	CHECK	Lisa	2016.06.06	SIZE A4
Angle	±3°				SHEET 1/1
DIM	TOL	APPROVE			PROJ.

SCONDAR

SCONDAR ELECTRONIC LIMITED

PART NO. SCTRNB3.5-4141

TITLE: Terminal 430R copper Tin plated 2.5～4.0mm² wire, ID:4.30mm OD:8.00mm MPQ=1Kpcs