RoHS

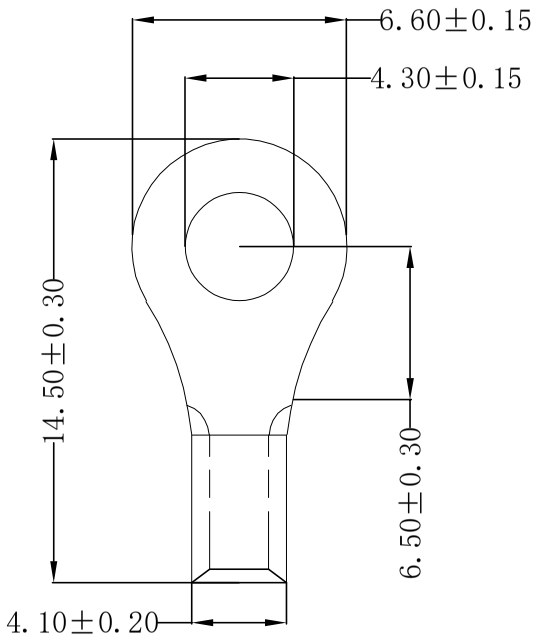

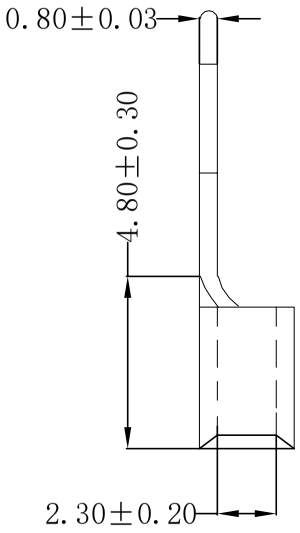

Technical requirements:

-Material:Copper (紫铜)
-Applicable wire:1.50～2.50mm²
-Surface treatment: Tin plating
-Plating thickenss: 2.5um～5um
-Coating temperature: 120° /2H
-Max Current: 27A
-USA Screw:#8
-Appearance: the body should not be scratched or oxidized
-Meet rosh and customer environmental requirements

REV	DATE	MODIFICATION DESCRIPTION	CHANGE	APPROVE
A0	2016.06.06	NEW	———	———

OPERATION				
X.X	±0.35	DRAW	YANG	2016.06.06
X.XX	±0.25	DESIGN		
X.XXX	±0.15	CHECK	Lisa	2016.06.06
Angle	±3°	APPROVE		
DIM	TOL			

SCALE	——
UNIT	mm
SIZE	A4
SHEET	1/1
PROJ.	

SCONDAR

SCONDAR ELECTRONIC LIMITED

PART NO.	SCTRNB2-4S141
TITLE:	Terminal 4.30R copper Tin plated 1.5～2.5mm² wire, ID:4.30mm OD:6.60mm MPQ=1Kpcs