RoHS

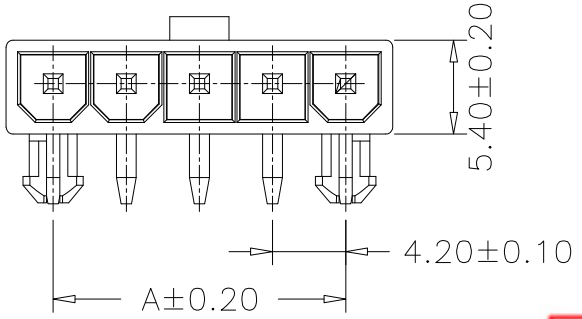

Recommended P.C.B Layout

General Tolerance±0.05

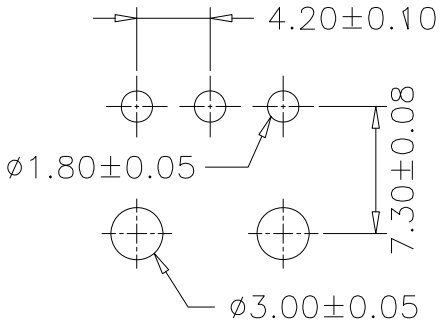

东莞市晟凯达电子科技有限公司
工程专用章

受控

Specification:

-Current Rating: 9A AC/DC
-Voitage Rating: 600V AC/DC
-Insulation Resistance: 1000MΩ(Min)
-Contact resistance: 20mΩ(Max).
-Withstanding Voltage: 1500VAC(Min)
-Operation Temperature: -25℃ to +85℃

Material:

-Insulator Material: Nylon 66(UL94V-2)
-Contact Material: Brass
-Finish: Tin Plated
-Color: Natural

Ordering Information

SCT4201WRF- xx C 0 NA 103

- xx: No.of Pins See Table
- C: Material C=PA66 V2
- 0: Package 0=PE Bag
- NA: Color NA=Natural

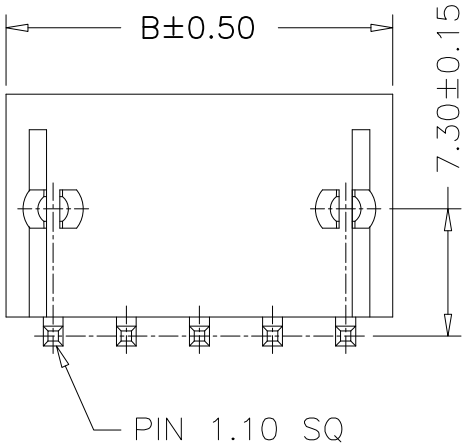

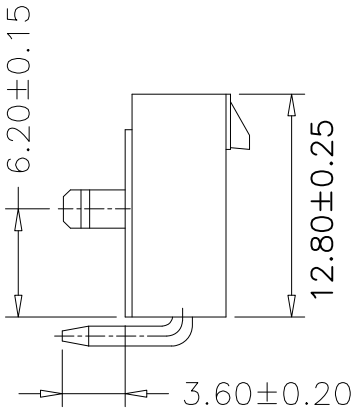

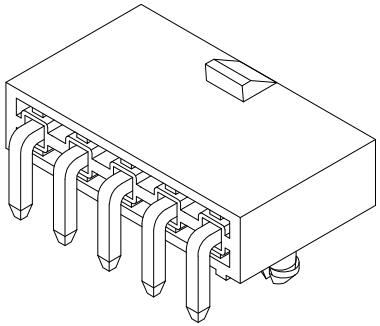

Poles	A	B
	Dimensions	
5	16.80	22.20
4	12.60	13.80
3	8.40	18.00
2	4.20	9.60

REV	DATE	MODIFICATION DESCRIPTION	CHANGE	APPROVE
A1	2021.07.10	Changed from SCT4201WR-F-xxP to SCT4201WRF-xxC0NA103	———	———
A0	2020.03.03	NEW	———	———

OPERATION	
X.X	±0.35
X.XX	±0.25
X.XXX	±0.15
Angle	± 3°
DIM	TOL

DRAW	Peng	2021.07.10
DESIGN		
CHECK	Lisa	2021.07.10
APPROVE	Allen	2021.07.10

SCALE	—
UNIT	mm
SIZE	A4
SHEET	1/1
PROJ.	

SCONDAR

SCONDAR ELECTRONIC LIMITED

PART NO.	SCT4201WRF-xxC0NA103 A1
TITLE:	MX4.2 90° Wafer