RoHS

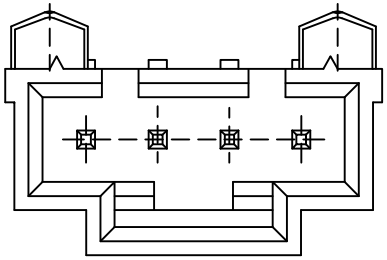

受控

Recommended P.C.B Layout

General Tolerance±0.05

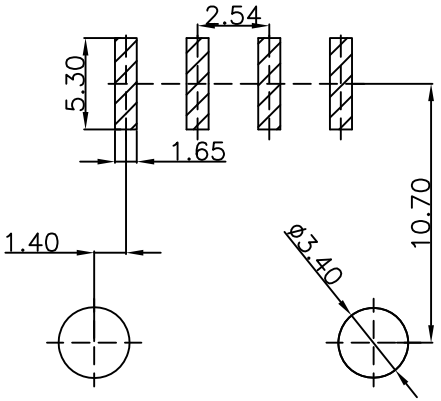

Specification:

-Current Rating: 2A AC/DC
-Voitage Rating: 250V AC/DC
-Insulation Resistance: 1000MΩ Min
-Withstanding Voltage: 500VAC Min
-Contact resistance: 20mΩ(Max).
-Operation Temperature: -25℃ to +85℃

Material:

-Insulator (Housing): PA9T (UL94V-0)
-Contacts: Brass
-Solder: Tin Plated
-Color: Black

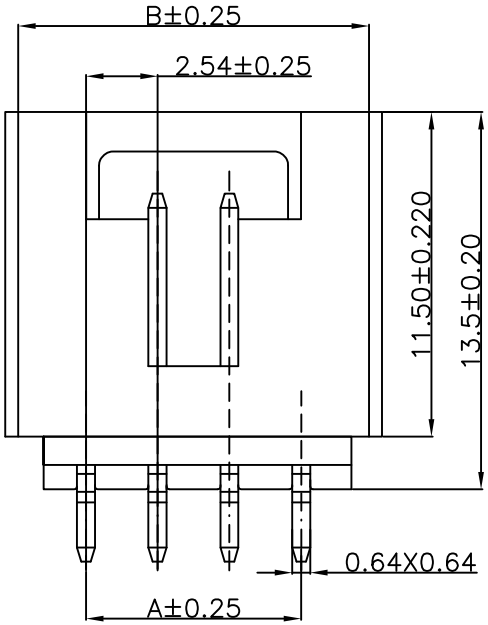

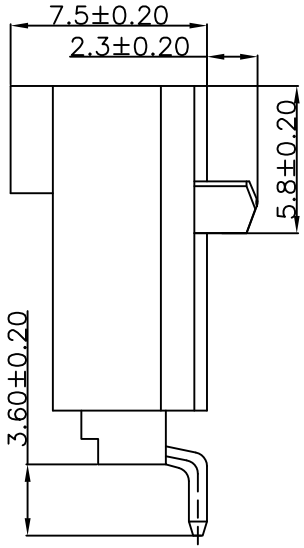

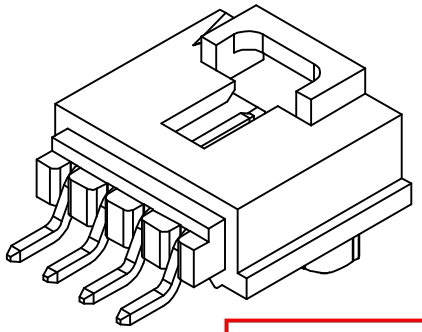

Ordering Information

SCT2544WRS- ** E 0 BK 103

- ** : No.of Pins See Table
- E : Insulation E=PA9T V0
- 0 : Package 2=Tube
- BK : Color BK=Black

10	22.86	27.94	19	45.72	50.80			
9	20.32	25.40	18	43.18	48.26			
8	17.78	22.86	17	40.64	45.72			
7	15.24	20.32	16	38.10	43.18			
6	12.70	17.78	15	33.56	40.64			
5	10.16	15.24	14	33.02	38.10			
4	7.62	12.70	13	30.48	33.56			
3	5.08	10.16	12	27.94	33.02			
2	2.54	7.62	11	25.40	30.48	20	48.26	53.34
Poles	A	B	Poles	A	B	Poles	A	B
	Dimensions			Dimensions			Dimensions	

东莞市晟凯达电子科技有限公司
工程专用章

REV	DATE	MODIFICATION DESCRIPTION	CHANGE	APPROVE
A1	2021.07.09	Changed from SCT2544WR-S-xxP to SCT2544WRS-xxE2BK103	———	———
A0	2019.10.15	NEW	———	———

OPERATION	
X.X	±0.35
X.XX	±0.25
X.XXX	±0.15
Angle	± 3°
DIM	TOL

DRAW	Peng	2021.07.09
DESIGN		
CHECK	Lisa	2021.07.09
APPROVE	Allen	2021.07.09

SCALE	—
UNIT	mm
SIZE	A4
SHEET	1/1
PROJ.	

SCONDAR

SCONDAR ELECTRONIC LIMITED

PART NO. SCT2544WRS-xxE2BK103 A1

TITLE: MX2.54 CD-ROM SMT 90° Wafer Connector