RoHS

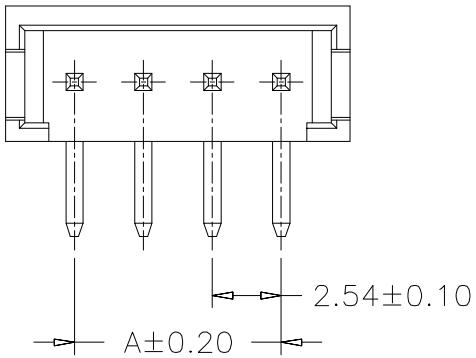

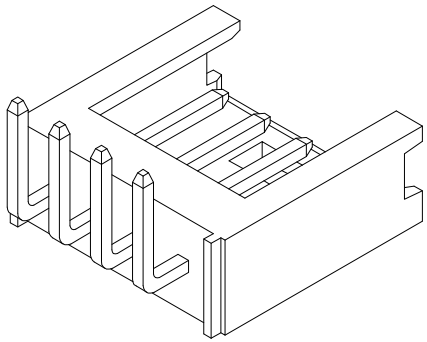

Recommended P.C.B Layout

General Tolerance±0.05

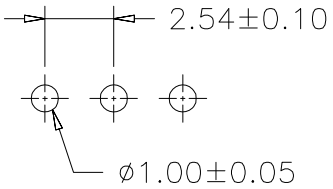

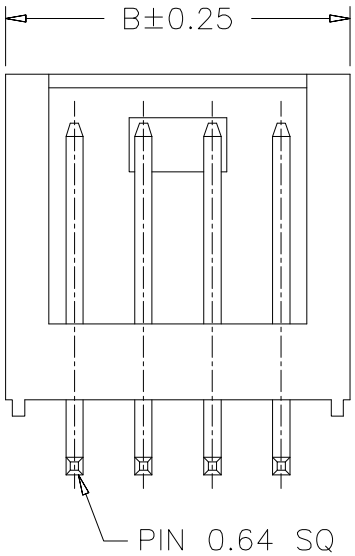

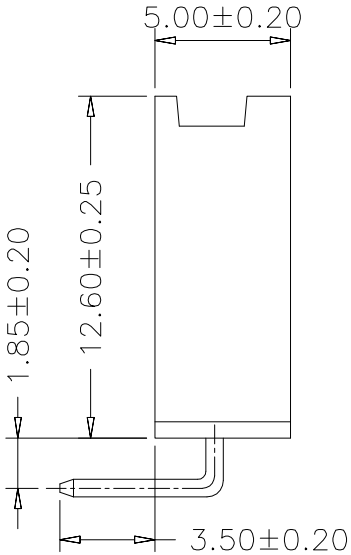

Specification:
- -Current Rating: 3A AC/DC
- -Voitage Rating: 250V AC/DC
- -Insulation Resistance: 1000MΩ Min
- -Withstanding Voltage: 1000VAC Min
- -Contact resistance: 20mΩ(Max).
- -Operation Temperature: -25℃ to +85℃

Material:
- -Insulator (Housing): Nylon 66 (UL94V-0)
- -Contacts: Brass
- -Solder: Tin Plated
- -Color: Black

Ordering Information

SCT2542WR - ** B 0 BK 108

- ** : No.of Pins See Table
- B : Insulation B=PA66
- 0 : Package 0=PE Bag
- BK : Color BK=Black

东莞市晟凯达电子科技有限公司
工程专用章

受控

Poles	A	B	Poles	A	B	Poles	A	B
	Dimensions			Dimensions			Dimensions	
10	22.86	27.94	19	45.72	50.80			
9	20.32	25.40	18	43.18	48.26			
8	17.78	22.86	17	40.64	45.72			
7	15.24	20.32	16	38.10	43.18			
6	12.70	17.78	15	33.56	40.64			
5	10.16	15.24	14	33.02	38.10			
4	7.62	12.70	13	30.48	33.56	22	53.34	58.42
3	5.08	10.16	12	27.94	33.02	21	50.80	55.88
2	2.54	7.62	11	25.40	30.48	20	48.26	53.34

REV	DATE	MODIFICATION DESCRIPTION	CHANGE	APPROVE
A1	2021.07.07	Changed from SCT2542WR-xxP to SCT2542WR-xxB0BK108	———	———
A0	2019.10.15	NEW	———	———

OPERATION	
X.X	±0.35
X.XX	±0.25
X.XXX	±0.15
Angle	± 3°
DIM	TOL

DRAW	Peng	2021.07.07
DESIGN		
CHECK	Lisa	2021.07.07
APPROVE	Allen	2021.07.07

SCALE	—
UNIT	mm
SIZE	A4
SHEET	1/1
PROJ.	

SCONDAR

SCONDAR ELECTRONIC LIMITED

PART NO. SCT2542WR-xxB0BK108 A1

TITLE: MX2.54mm Pitch 90° Wafer Connector