RoHS

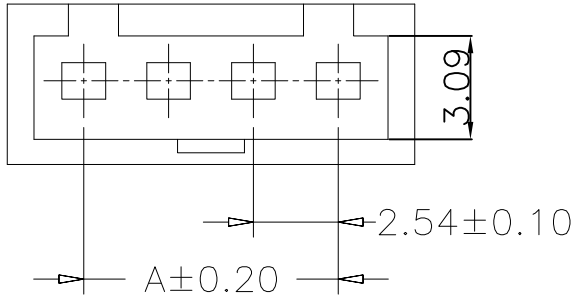

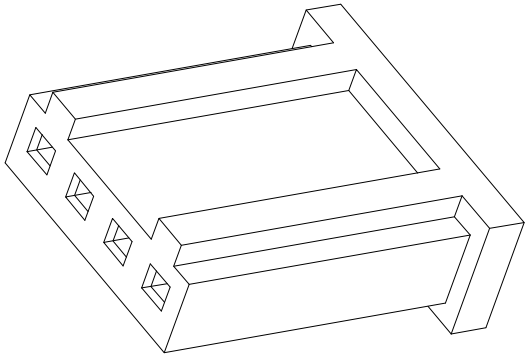

Specification:
-Current Rating: 3A AC/DC
-Voitage Rating: 250V AC/DC
-Insulation Resistance: 1000MΩ Min
-Withstanding Voltage: 1000VAC(1Min)
-Contact resistance: 20mΩ(Max).
-Operation Temperature: -25℃ to +85℃

Material:
-Insulator (Housing): Nylon 66 (UL94V-0)
-Color: Black

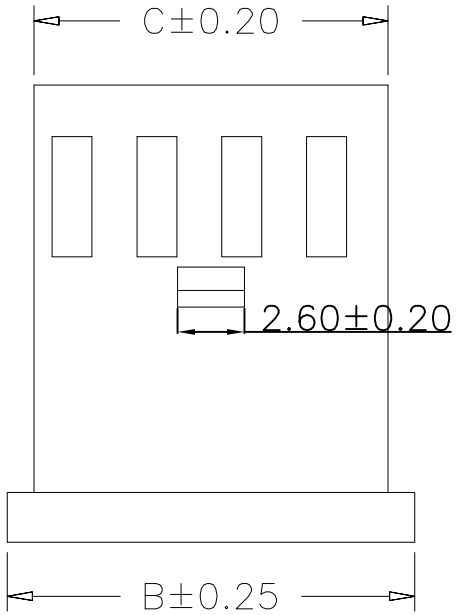

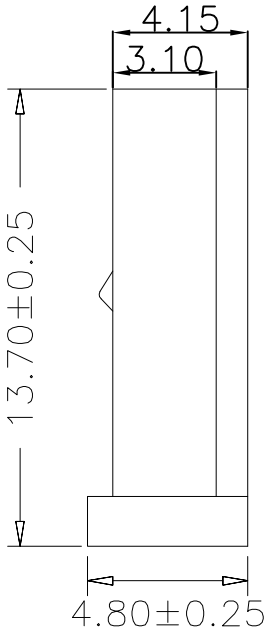

Ordering Information

SCT2542H - xx B BK 119

- xx: No.of Pins See Table
- B: Insulation B=PA66
- BK: Color BK=Black

10	22.86	27.42	25.92	19	45.72	50.28	48.78				
9	20.32	24.88	23.38	18	43.18	47.74	46.24				
8	17.78	22.34	20.84	17	40.64	45.20	43.70				
7	15.24	19.80	18.30	16	38.10	42.66	41.16				
6	12.70	17.26	15.76	15	33.56	40.12	38.62				
5	10.16	14.72	13.22	14	33.02	37.58	36.08				
4	7.62	12.18	10.68	13	30.48	35.04	33.54	22	53.34	57.90	56.40
3	5.08	9.64	8.14	12	27.94	32.50	31.00	21	50.80	55.36	53.86
2	2.54	7.10	5.60	11	25.40	29.96	28.46	20	48.26	52.82	51.32
Poles	A	B	C	Poles	A	B	C	Poles	A	B	C
	Dimensions				Dimensions				Dimensions		

REV	DATE	MODIFICATION DESCRIPTION	CHANGE	APPROVE
A1	2021.07.07	Changed from SCT2542-xxP to SCT2542H-xxBBK119		
A0	2019.10.15	NEW		

OPERATION	
X.X	±0.35
X.XX	±0.25
X.XXX	±0.15
Angle	± 3°
DIM	TOL

DRAW	Peng	2021.07.07
DESIGN		
CHECK	Lisa	2021.07.07
APPROVE	Allen	2021.07.07

SCALE	–
UNIT	mm
SIZE	A4
SHEET	1/1
PROJ.	

SCONDAR

SCONDAR ELECTRONIC LIMITED

PART NO. SCT2542H-xxBBK119 A1

TITLE: AMP280358 2.54mm Pitch Housing Connector