RoHS

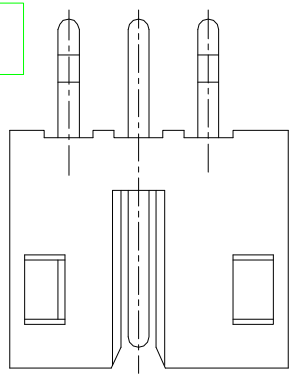

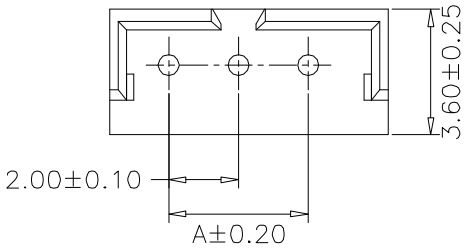

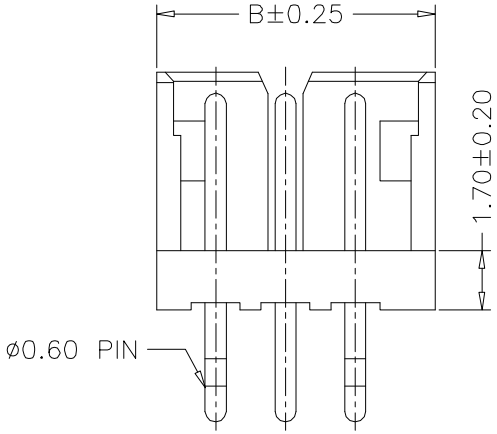

Recommended P.C.B Layout

General Tolerance±0.05

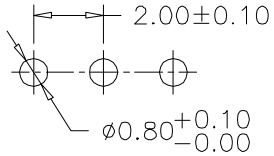

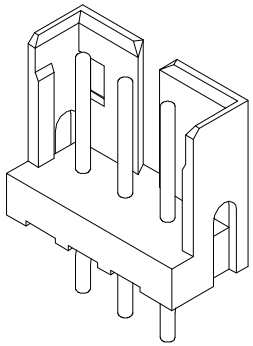

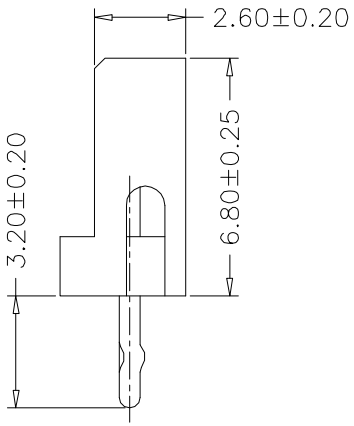

Specification:
- -Current Rating: 1A AC/DC
- -Voitage Rating: 100V AC/DC
- -Insulation Resistance: 1000MΩ Min
- -Withstanding Voltage: 800VAC(1Min)
- -Contact resistance: 20mΩ(Max).
- -Operation Temperature: -25℃ to +85℃

Material:
- -Insulator (Housing): PA66 (UL94V-0)
- -Contacts:Brass Tin Plated
- -Color: White

Ordering Information

SCT2007WV - ** B 0 WT 602

- ** — No.of Pins See Table
- B — Insulation B=PA66
- 0 — Package 0=PE Bag
- WT — Color WT=White

Poles	A	B	Poles	A	B
	Dimensions			Dimensions	
9	16.00	19.96			
8	14.00	17.96			
7	12.00	15.96	15	28.00	31.96
6	10.00	13.96	14	26.00	29.96
5	8.00	11.96	13	24.00	27.96
4	6.00	9.96	12	22.00	25.96
3	4.00	7.96	11	20.00	23.96
2	2.00	5.96	10	18.00	21.96

REV	DATE	MODIFICATION DESCRIPTION	CHANGE	APPROVE
A1	2021.07.15	Changed from SCT2007WV-xP to SCT2007WV-xxB0WT602		
A0	2015.05.15	NEW		

OPERATION	
X.X	±0.35
X.XX	±0.25
X.XXX	±0.15
Angle	± 3°
DIM	TOL

DRAW	Peng	2021.07.15
DESIGN		
CHECK	Lisa	2021.07.15
APPROVE	Allen	2021.07.15

SCALE	
UNIT	mm
SIZE	A4
SHEET	1/1
PROJ.	

SCONDAR

SCONDAR ELECTRONIC LIMITED

PART NO.	SCT2007WV-xxB0WT602 A1
TITLE:	AMP 2.00mm 180° Wafer